# LED WALL PACK LIGHT NG-WP

## FEATURES

### FEATURES

- Available in 60W ~ 150W power range
- Voltage rating: AC120~277V
- Multiple conduit entry points; Easy installation and maintenance
- Die-cast aluminum housing; Non-yellowing glass cover
- 100,000-hour lifespan & 5-year warranty
- Selectable on/off photocell
- Adjustable CCT and power
- Glass or polycarbonate (PC) lens options

CCT Adjustable

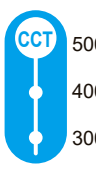


Power Adjustable

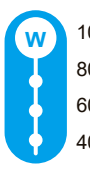


### PRODUCT FAMILY




60W/80W/100W/120W



150W

## SPECIFICATION PARAMETERS

| Model | Lumen (±10%LM) | Efficacy (±10%) | Beam Angle | LED/ Qty. | | Power (±10%) | Voltage/ Frequency | Color Temperature |
|---|---|---|---|---|---|---|---|---|
| NG-WP-60W | 9000 | 150LM/W | 120° | 100pcs (Fixed) 200pcs (Adjustable) | SMD3030 | 60W | Input Voltage 120-277VAC 50/60 Hz Power Factor (PF) > 0.9 | WW 3000K NW 4000K DW 5000K CW 5700K |
| NG-WP-80W | 12000 | 150LM/W | 120° | | SMD3030 | 80W | | |
| NG-WP-100W | 15000 | 150LM/W | 120° | 140pcs (Fixed) 280pcs (Adjustable) | SMD3030 | 100W | | |
| NG-WP-120W | 18000 | 150LM/W | 120° | | SMD3030 | 120W | | |
| NG-WP-150W | 22500 | 150LM/W | 120° | 560pcs | SMD2835 | 150W | | |

| Certifications | IP Rating | Warranty | Lifespan | Housing | Ambient Temperature | Surge Protection | Color Rendering Index | Intelligent Dimming |
|---|---|---|---|---|---|---|---|---|
| DLC / UL / ETL CE / RoHS | IP65 | 5 Years | 100,000Hrs | Die-cast Aluminum | -40°C to 40°C (-40°F~104°F) | 6 kV | Ra≥80 | 0-10V Dimming Selectable ON/OFF Photocell |

* Note: Operating with emergency battery temperature range: 10°C to 40°C (+50˚F to + 104˚F).

## ORDERING GUIDE

Example:NG-WP-100WH-35CD-S

| Code | Fixture Type | Power | Voltage | CCT | CCT Selectable | Power Selectable | Sensor | Internal Code |
|---|---|---|---|---|---|---|---|---|
| **NG** company code | **WP** Wall pack light | **60W** 60Watts<br>**80W** 80Watts<br>**100W** 100Watts<br>**120W** 120Watts<br>**150W** 150Watts | **Blank** 120-277V<br>**H** 277-480V | **35** Selectable Color Temperature<br>**30** 3000K<br>**40** 4000K<br>**50** 5000K | **Blank** Non-adjustable<br>**C** Selectable Color Temperature | **Blank** Non-adjustable<br>**D** Selectable Power | **S** Photocell<br>**Blank** Without Sensor | **Blank** Alphanumeric |

## DIMENSIONS

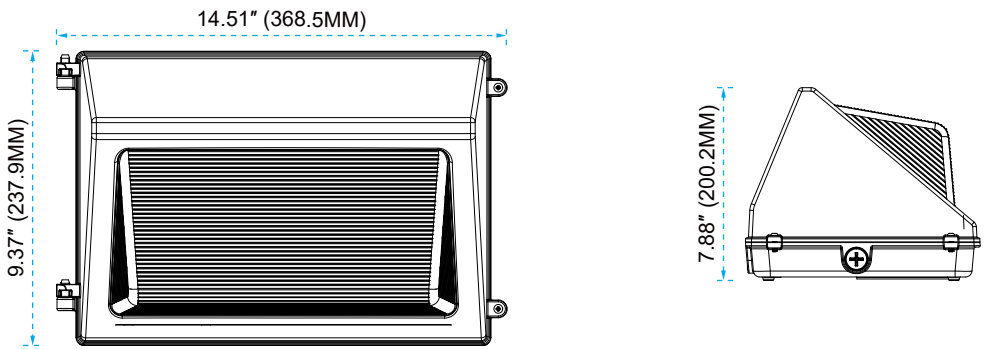


**60W/80W/100W/120W**

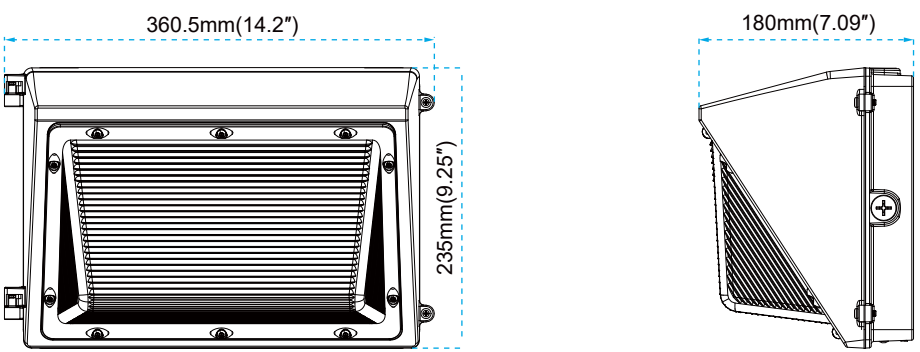


**150W**

## INSTALLATION INSTRUCTIONS

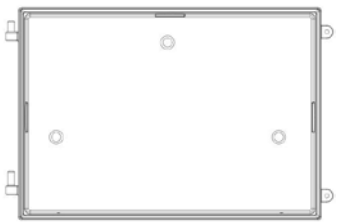

① Remove the base of the wall pack.



② Attach the base securely to the wall.

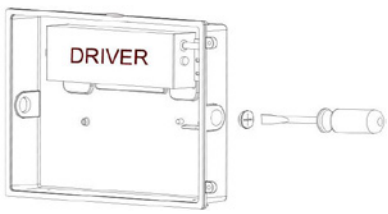


③ Use a screwdriver to remove the screws.

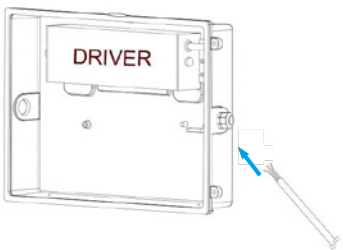


④ Install the waterproof connector first, then pass the AC cord through the connector.

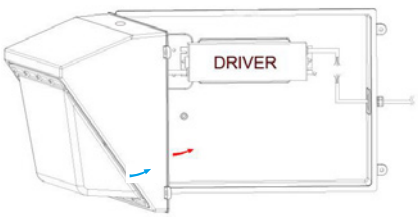


⑤ Place the cover back onto the base. Connect the waterproof connectors together. Tighten the cover and secure it with screws.

## HOW TO ADJUST THE POWER AND COLOR TEMPERATURE OF THE LIGHT:

### * ATTENTION:

1. Please ensure that the light is turned off before adjusting the CCT or wattage.
2. Turn on the fixture only after completing the settings.

### CCT SELECTIONS:

Three selectable CCT settings are available: 3000K, 4000K, and 5000K.
Please select your preferred color temperature before installation.

| WW | CW/WW | CW |
|---|---|---|
| 3000K | 4000K | 5000K |

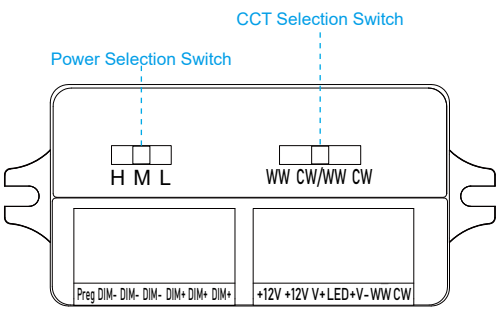


60W/80W/100W/120W

### POWER SELECTIONS:

Move the power selection switch from left to right to decrease the power accordingly.

| | 40% | 60% | 80% | 100% |
|---|---|---|---|---|
| NG-WP-60W | / | 36W | 48W | 60W |
| NG-WP-80W | / | 48W | 64W | 80W |
| NG-WP-100W | / | 60W | 80W | 100W |
| NG-WP-120W | / | 72W | 96W | 120W |
| NG-WP-150W | 60W | 90W | 120W | 150W |

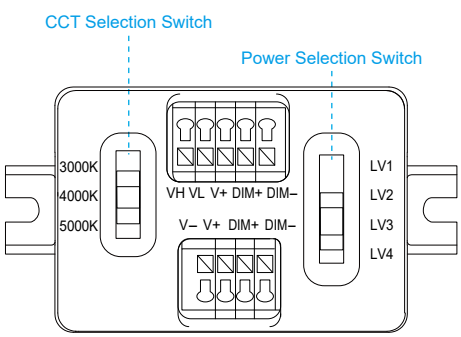


150W

# LED WALL PACK LIGHT NG-WP

## APPLICATIONS

LED Wall Pack series can be widely used in hospitals, museums, gas stations, alleys, pathways, parking lots, college campuses, barns, sheds, warehouse, corridors, parking garages, etc.


Warehouse


Doorway


Parking Lots


Corridor

## PACKAGE

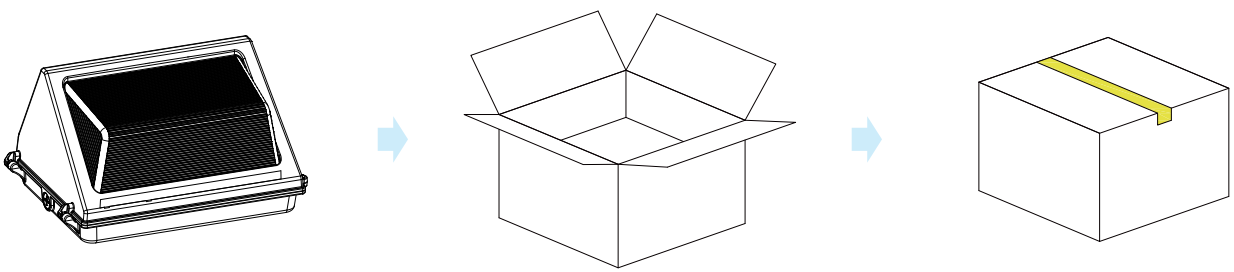

| Power | Unit | Size | Gross Weight | Volume |
|---|---|---|---|---|
| NG-WP-60W | 1 PC | 375x285x230mm/ 14.76"*11.22"*9.06" | 4.02 KG/ 8.86 lbs | 0.025m³ |
| NG-WP-80W | 4 PCS | 605x395x500mm/ 23.82"*15.55"*19.69" | 17.3 KG/ 38.14 lbs | 0.119m³ |
| NG-WP-100W | 1 PC | 375x285x230mm/ 14.76"*11.22"*9.06" | 4.31 KG/ 9.50 lbs | 0.025m³ |
| NG-WP-120W | 4 PCS | 605x395x500mm/ 23.82"*15.55"*19.69" | 18.32 KG/ 40.39 lbs | 0.119m³ |
| NG-WP-150W | 1 PC | 380x245x190mm/ 14.96"*9.65"*7.48" | 4.35 KG/ 9.59 lbs | 0.018m³ |
| | 4 PCS | 530x400x425mm/ 20.87"*15.75"*16.73" | 17.5 KG/ 38.58 lbs | 0.09m³ |